Pigtail type InGaAs PIN photodiode with preamp G8925 series

FEATURES

- Ultra high speed response:10Gbps
- Low Power Supply Voltage:5V
- Typical sensitivity:0 ～ -18dBm

BLOCK DIAGRAM

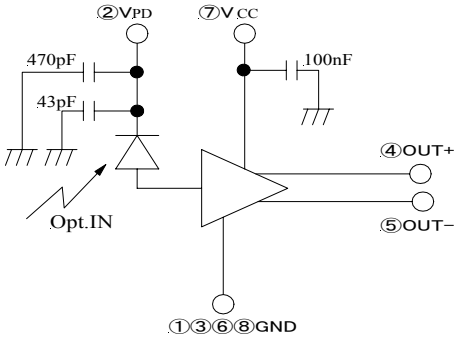

ABSOLUTE MAXIMUM RATINGS

(Ta=25deg.C)

Parameter	Symbol	Value	Unit
Operating Temperature	Topr	-20 to +70	deg.C
Storage Temperature	Tstg	-40 to +85	deg.C

ELECTRICAL AND OPTICAL CHARACTERISTICS

(Unless Otherwise Noted Ta=25deg.C,Vcc=Vpd=5V,Vee=0V, RL=50Ω)

Parameter	Symbol	Conditions	Min	Typ.	Max	Unit
Supply Current	Icc	Dark state, R_L=∞		78	--	mA
Photo Sensitivity	S	λ=1.3um	0.70	0.85	--	A/W
		λ=1.55um	0.75	0.90	--	
Bandwidth	fc	λ=1.55um, -3dB	--	10	--	GHz
Differential transimpedance	Tz	RL=100ohm, f=100MHz	--	1.0	--	kΩ
Sensitivity		10Gbps,NRZ PRBS=2^{23}-1,BER=10^{-10}	-18	--	0	dBm

DIMENSIONAL OUTLINE

PIN CONNECTION

#1,3,6,8 GND

#2 Vpd

#4 Vout+

#5 Vout-

UNIT:mm, unless otherwise noted:±0.2

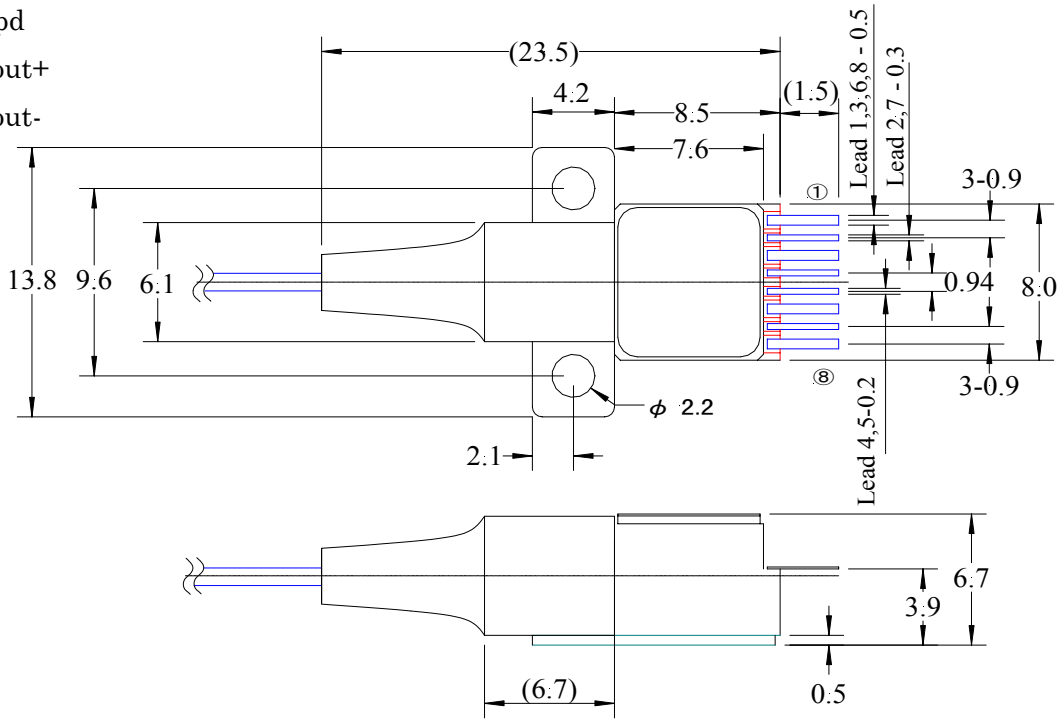

Four connector types are available; SC/SPC(-21), FC/SPC(-22), MU(-23), LC(-24).